http://freshersplane.com/

EE : ELECTRICAL ENGINEERING

Duration: Three Hours *Maximum Marks*: 100

Read the following instructions carefully.

1. Do not open the seal of the Question Booklet until you are asked to do so by the invigilator.
2. Take out the **O**ptical **R**esponse **S**heet (**ORS)** from this Question Booklet **without breaking the seal** and read the instructions printed on the ORS carefully. If you find that either:
   a. The Question Booklet Code printed at the right hand top corner of this page does not match with the Question Booklet Code at the right hand top corner of the **ORS** or
   b. The Question Paper Code preceding the Registration number on the **ORS** is not **EE**, then exchange the booklet immediately with a new sealed Question Booklet.
3. On the right half hand side of the **ORS,** using ONLY a **black ink ballpoint pen**, (i) darken the appropriate bubble under each digit of your registration number and (ii) write your registration number, your name and name of the examination centre and put your signature at the specified location.
4. This Question Booklet contains **20** pages including blank pages for rough work. After you are permitted to open the seal, check all pages and report discrepancies, if any, to the invigilator.
5. There are a total of 65 questions carrying 100 marks. All these questions are of objective type. Each question has only **one** correct answer. Questions must be answered on the left hand side of the **ORS** by darkening the appropriate bubble (marked A, B, C, D) using ONLY a **black ink ballpoint pen** against the question number. **For each question darken the bubble of the correct answer**. More than one answer bubbled against a question will be treated as an incorrect response.
6. Since bubbles darkened by the black ink ballpoint pen **cannot** be erased, candidates should darken the bubbles in the ORS **very carefully**.
7. Questions Q.1 – Q.25 carry 1 mark each. Questions Q.26 – Q.55 carry 2 marks each. The 2 marks questions include two pairs of common data questions and two pairs of linked answer questions. The answer to the second question of the linked answer questions depends on the answer to the first question of the pair. If the first question in the linked pair is wrongly answered or is not attempted, then the answer to the second question in the pair will not be evaluated.
8. Questions Q.56 – Q.65 belong to General Aptitude (GA) section and carry a total of 15 marks. Questions Q.56 – Q.60 carry 1 mark each, and questions Q.61 – Q.65 carry 2 marks each.
9. Questions not attempted will result in zero mark and wrong answers will result in **NEGATIVE** marks. For all 1 mark questions, ⅓ mark will be deducted for each wrong answer. For all 2 marks questions, ⅔ mark will be deducted for each wrong answer. However, in the case of the linked answer question pair, there will be negative marks only for wrong answer to the first question and no negative marks for wrong answer to the second question.
10. Calculator is allowed whereas charts, graph sheets or tables are **NOT** allowed in the examination hall.
11. Rough work can be done on the Question Booklet itself. Blank pages are provided at the end of the Question Booklet for rough work.
12. Before the start of the examination, write your name and registration number in the space provided below using a black ink ballpoint pen.

Name									
Registration Number	**EE**								

http://freshersplane.com/ http://freshersplane.com/

Q.1 to Q.25 carry one mark each.

Q.1 Given a vector field $\mathbf{F} = y^2 x\,\mathbf{a}_x + yz\,\mathbf{a}_y + x^2\,\mathbf{a}_z$, the line integral $\int \mathbf{F} \cdot d\mathbf{l}$ evaluated along a segment on the x-axis from $x = 1$ to $x = 2$ is

(A) –2.33 (B) 0 (C) 2.33 (D) 7

Q.2 The equation $\begin{bmatrix} 2 & 2 \\ 1 & 1 \end{bmatrix} \begin{bmatrix} x_1 \\ x_2 \end{bmatrix} = \begin{bmatrix} 0 \\ 0 \end{bmatrix}$ has

(A) no solution

(B) only one solution $\begin{bmatrix} x_1 \\ x_2 \end{bmatrix} = \begin{bmatrix} 0 \\ 0 \end{bmatrix}$

(C) non-zero unique solution

(D) multiple solutions

Q.3 Square roots of i, where $i = \sqrt{-1}$, are

(A) $i, -i$

(B) $\cos(\frac{\pi}{4}) + i\sin(\frac{\pi}{4}),\ \cos(\frac{3\pi}{4}) + i\sin(\frac{3\pi}{4})$

(C) $\cos(\frac{\pi}{4}) + i\sin(\frac{3\pi}{4}),\ \cos(\frac{3\pi}{4}) + i\sin(\frac{\pi}{4})$

(D) $\cos(\frac{3\pi}{4}) + i\sin(\frac{3\pi}{4}),\ \cos(\frac{3\pi}{4}) + i\sin(\frac{3\pi}{4})$

Q.4 Three moving iron type voltmeters are connected as shown below. Voltmeter readings are V, V_1 and V_2, as indicated. The correct relation among the voltmeter readings is

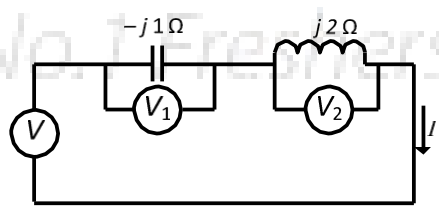

(A) $V = \frac{V_1}{\sqrt{2}} + \frac{V_2}{\sqrt{2}}$ (B) $V = V_1 + V_2$ (C) $V = V_1 V_2$ (D) $V = V_2 - V_1$

Q.5 Leakage flux in an induction motor is

(A) flux that leaks through the machine
(B) flux that links both stator and rotor windings
(C) flux that links none of the windings
(D) flux that links the stator winding or the rotor winding but not both

Q.6 The angle δ in the swing equation of a synchronous generator is the

(A) angle between stator voltage and current.
(B) angular displacement of the rotor with respect to the stator.
(C) angular displacement of the stator mmf with respect to a synchronously rotating axis.
(D) angular displacement of an axis fixed to the rotor with respect to a synchronously rotating axis.

http://freshersplane.com/ http://freshersplane.com/

Q.7 Consider a delta connection of resistors and its equivalent star connection as shown below. If all elements of the delta connection are scaled by a factor k, $k > 0$, the elements of the corresponding star equivalent will be scaled by a factor of

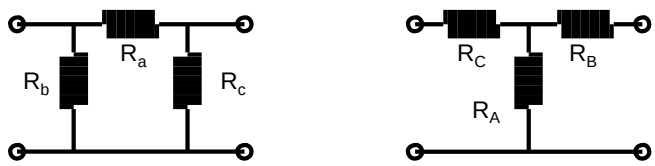

(A) k^2 (B) k (C) $1/k$ (D) $\sqrt{k}$

Q.8 A band-limited signal with a maximum frequency of 5 kHz is to be sampled. According to the sampling theorem, the sampling frequency in kHz which is not valid is

(A) 5 (B) 12 (C) 15 (D) 20

Q.9 For a periodic signal $v(t)$ $30\,sin\,100\,t$ $10\,cos\,300\,t$ $6\,sin\,(500\,t$ $/\,4)$, the fundamental frequency in rad/s is

(A) 100 (B) 300 (C) 500 (D) 1500

Q.10 A bulb in a staircase has two switches, one switch being at the ground floor and the other one at the first floor. The bulb can be turned ON and also can be turned OFF by any one of the switches irrespective of the state of the other switch. The logic of switching of the bulb resembles

(A) an AND gate (B) an OR gate (C) an XOR gate (D) a NAND gate

Q.11 The Bode plot of a transfer function $G(s)$ is shown in the figure below.

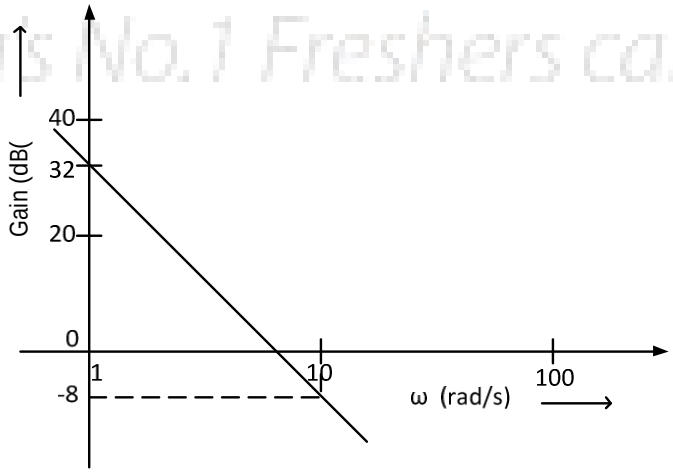

The gain $(20 \log|G(s)|)$ is 32 dB and –8 dB at 1 rad/s and 10 rad/s respectively. The phase is negative for all ω. Then $G(s)$ is

(A) $\frac{39.8}{s}$ (B) $\frac{39.8}{s^2}$ (C) $\frac{32}{s}$ (D) $\frac{32}{s^2}$

http://freshersplane.com/

Q.12 In the feedback network shown below, if the feedback factor k is increased, then the

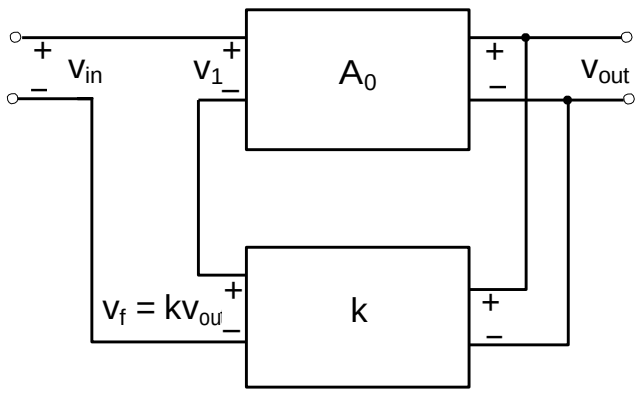

(A) input impedance increases and output impedance decreases.
(B) input impedance increases and output impedance also increases.
(C) input impedance decreases and output impedance also decreases.
(D) input impedance decreases and output impedance increases.

Q.13 The input impedance of the permanent magnet moving coil (PMMC) voltmeter is infinite. Assuming that the diode shown in the figure below is ideal, the reading of the voltmeter in Volts is

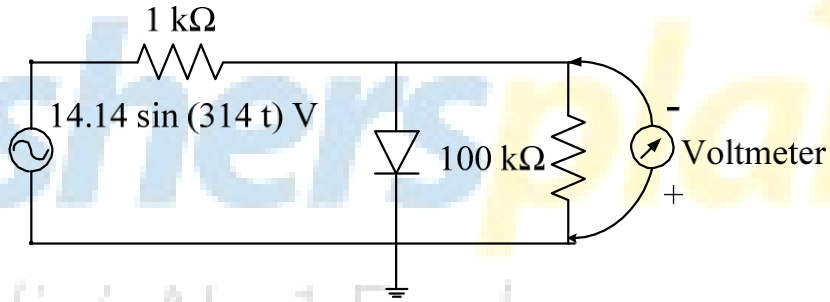

(A) 4.46 (B) 3.15 (C) 2.23 (D) 0

Q.14 The curl of the gradient of the scalar field defined by $V \quad 2x^2y \quad 3y^2z \quad 4z^2x$ is

(A) $4xy\,\mathbf{a}_x \quad 6yz\,\mathbf{a}_y \quad 8zx\,\mathbf{a}_z$

(B) $4\mathbf{a}_x \quad 6\mathbf{a}_y \quad 8\mathbf{a}_z$

(C) $4xy \quad 4z^2\ \mathbf{a}_x \quad 2x^2 \quad 6yz\ \mathbf{a}_y \quad 3y^2 \quad 8zx\ \mathbf{a}_z$

(D) 0

Q.15 A continuous random variable X has a probability density function $f(x) \quad e^{\ x}, 0 \quad x$. Then $P\{X \quad 1\}$ is

(A) 0.368 (B) 0.5 (C) 0.632 (D) 1.0

Q.16 The flux density at a point in space is given by $\mathbf{B} \quad 4x\,\mathbf{a}_x \quad 2ky\,\mathbf{a}_y \quad 8\mathbf{a}_z$ Wb/m^2. The value of constant k must be equal to

(A) –2 (B) –0.5 (C) +0.5 (D) +2

http://freshersplane.com/

Q.17 A single-phase transformer has no-load loss of 64 W, as obtained from an open-circuit test. When a short-circuit test is performed on it with 90% of the rated currents flowing in its both LV and HV windings, the measured loss is 81 W. The transformer has maximum efficiency when operated at

(A) 50.0% of the rated current.
(B) 64.0% of the rated current.
(C) 80.0% of the rated current.
(D) 88.8% of the rated current.

Q.18 A single-phase load is supplied by a single-phase voltage source. If the current flowing from the load to the source is $10 \quad 150^0$ A and if the voltage at the load terminals is $100 \quad 60^0$ V, then the

(A) load absorbs real power and delivers reactive power.
(B) load absorbs real power and absorbs reactive power.
(C) load delivers real power and delivers reactive power.
(D) load delivers real power and absorbs reactive power.

Q.19 A source $v_s(t) \quad V\cos 100 \quad t$ has an internal impedance of (4 + *j*3) Ω. If a purely resistive load connected to this source has to extract the maximum power out of the source, its value in Ω should be

(A) 3 (B) 4 (C) 5 (D) 7

Q.20 Two systems with impulse responses $h_1(t)$ and $h_2(t)$ are connected in cascade. Then the overall impulse response of the cascaded system is given by

(A) product of $h_1(t)$ and $h_2(t)$
(B) sum of $h_1(t)$ and $h_2(t)$
(C) convolution of $h_1(t)$ and $h_2(t)$
(D) subtraction of $h_2(t)$ from $h_1(t)$

Q.21 Which one of the following statements is NOT TRUE for a continuous time causal and stable LTI system?

(A) All the poles of the system must lie on the left side of the $j\omega$ axis.
(B) Zeros of the system can lie anywhere in the s-plane.
(C) All the poles must lie within $|s| \quad 1$.
(D) All the roots of the characteristic equation must be located on the left side of the $j\omega$ axis.

Q.22 The impulse response of a system is $h(t) \quad t\,u(t)$. For an input $u(t \quad 1)$, the output is

(A) $\frac{t^2}{2}u(t)$ (B) $\frac{t(t \quad 1)}{2}u(t \quad 1)$ (C) $\frac{(t \quad 1)^2}{2}u(t \quad 1)$ (D) $\frac{t^2 \quad 1}{2}u(t \quad 1)$

http://freshersplane.com/

Q.23 Assuming zero initial condition, the response $y(t)$ of the system given below to a unit step input $u(t)$ is

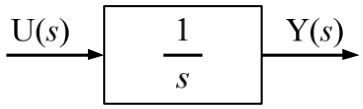

(A) $u(t)$ (B) $t\,u(t)$ (C) $\frac{t^2}{2}\,u(t)$ (D) $e^{t}\,u(t)$

Q.24 The transfer function $\frac{V_2(s)}{V_1(s)}$ of the circuit shown below is

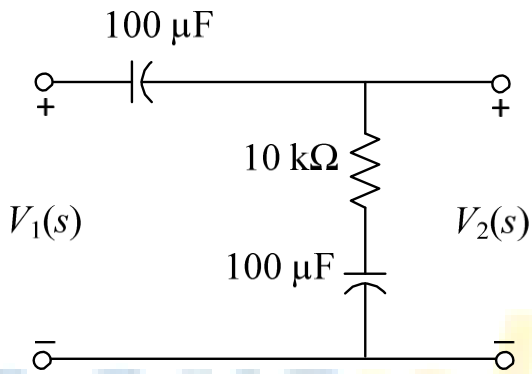

(A) $\frac{0.5s \quad 1}{s \quad 1}$ (B) $\frac{3s \quad 6}{s \quad 2}$

(C) $\frac{s \quad 2}{s \quad 1}$ (D) $\frac{s \quad 1}{s \quad 2}$

Freshersplane
India's No.1 Freshers career Site

Q.25 In the circuit shown below what is the output voltage (V_{out}) in Volts if a silicon transistor Q and an ideal op-amp are used?

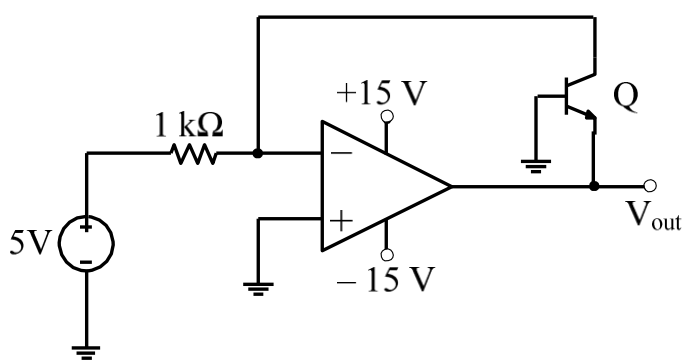

(A) −15 (B) −0.7 (C) +0.7 (D) +15

http://freshersplane.com/

Q.26 to Q.55 carry two marks each.

Q.26 When the Newton-Raphson method is applied to solve the equation $f(x) = x^3 - 2x - 1 = 0$, the solution at the end of the first iteration with the initial guess value as $x_0 = 1.2$ is

(A) –0.82 (B) 0.49 (C) 0.705 (D) 1.69

Q.27 A function $y = 5x^2 - 10x$ is defined over an open interval $x = (1, 2)$. At least at one point in this interval, $\frac{dy}{dx}$ is exactly

(A) 20 (B) 25 (C) 30 (D) 35

Q.28 A 4-pole induction motor, supplied by a slightly unbalanced three-phase 50 Hz source, is rotating at 1440 rpm. The electrical frequency in Hz of the induced negative sequence current in the rotor is

(A) 100 (B) 98 (C) 52 (D) 48

Q.29 Thyristor T in the figure below is initially off and is triggered with a single pulse of width 10 µs. It is given that $L = \frac{100}{}$ H and $C = \frac{100}{}$ F. Assuming latching and holding currents of the thyristor are both zero and the initial charge on C is zero, T conducts for

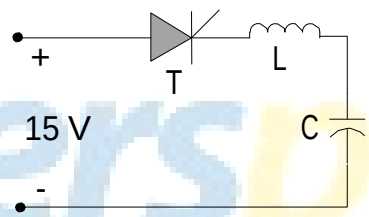

(A) 10 µs (B) 50 µs (C) 100 µs (D) 200 µs

Q.30 The following arrangement consists of an ideal transformer and an attenuator which attenuates by a factor of 0.8. An ac voltage V_{WX1} = 100V is applied across WX to get an open circuit voltage V_{YZ1} across YZ. Next, an ac voltage V_{YZ2} = 100V is applied across YZ to get an open circuit voltage V_{WX2} across WX. Then, V_{YZ1}/V_{WX1}, V_{WX2}/V_{YZ2} are respectively,

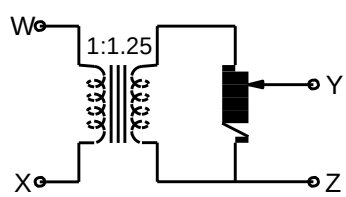

(A) 125/100 and 80/100 (B) 100/100 and 80/100
(C) 100/100 and 100/100 (D) 80/100 and 80/100

Q.31 Two magnetically uncoupled inductive coils have Q factors q_1 and q_2 at the chosen operating frequency. Their respective resistances are R_1 and R_2. When connected in series, their effective Q factor at the same operating frequency is

(A) $q_1R_1 + q_2R_2$ (B) $q_1/R_1 + q_2/R_2$
(C) $(q_1R_1 + q_2R_2)/(R_1 + R_2)$ (D) $q_1R_2 + q_2R_1$

http://freshersplane.com/

Q.32 The impulse response of a continuous time system is given by $h(t) \quad (t \quad 1) \quad (t \quad 3)$. The value of the step response at $t = 2$ is

(A) 0 (B) 1 (C) 2 (D) 3

Q.33 The signal flow graph for a system is given below. The transfer function $\frac{Y(s)}{U(s)}$ for this system is

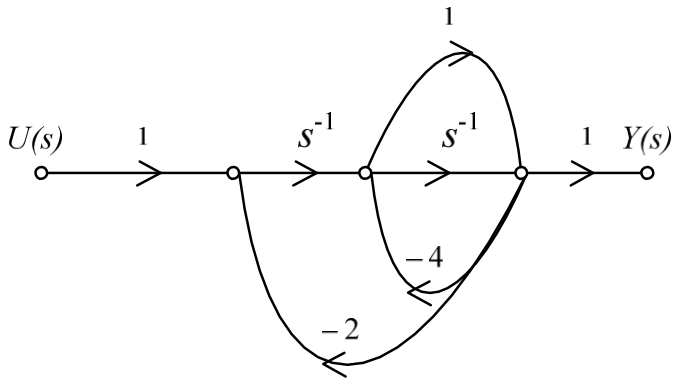

(A) $\frac{s \quad 1}{5s^2 \quad 6s \quad 2}$ (B) $\frac{s \quad 1}{s^2 \quad 6s \quad 2}$

(C) $\frac{s \quad 1}{s^2 \quad 4s \quad 2}$ (D) $\frac{1}{5s^2 \quad 6s \quad 2}$

Q.34 In the circuit shown below the op-amps are ideal. Then V_{out} in Volts is

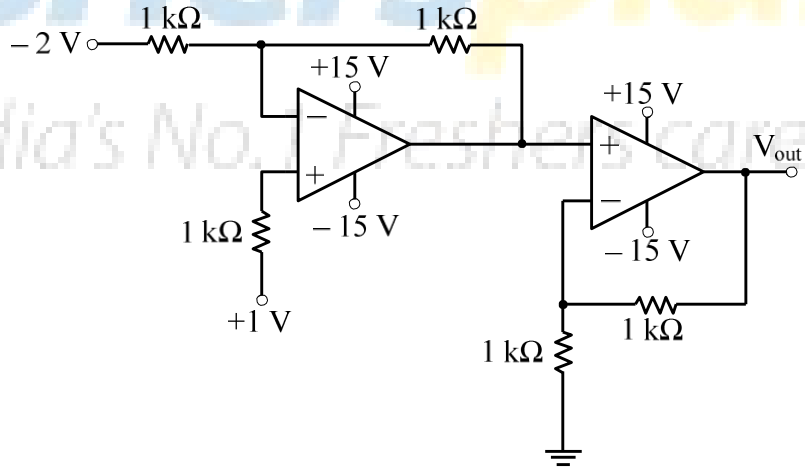

(A) 4 (B) 6 (C) 8 (D) 10

http://freshersplane.com/

Q.35 In the circuit shown below, Q_1 has negligible collector-to-emitter saturation voltage and the diode drops negligible voltage across it under forward bias. If V_{cc} is +5 V, X and Y are digital signals with 0 V as logic 0 and V_{cc} as logic 1, then the Boolean expression for Z is

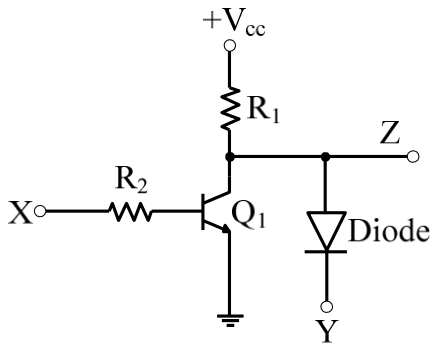

(A) XY (B) $\overline{X}Y$ (C) $X\overline{Y}$ (D) $\overline{XY}$

Q.36 The clock frequency applied to the digital circuit shown in the figure below is 1 kHz. If the initial state of the output Q of the flip-flop is '0', then the frequency of the output waveform Q in kHz is

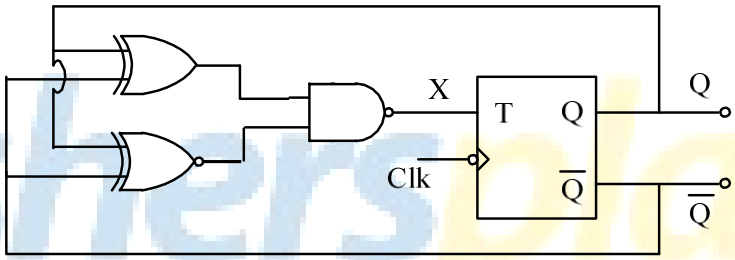

(A) 0.25 (B) 0.5 (C) 1 (D) 2

Q.37 $\oint \frac{z^2 - 4}{z^2 + 4}\, dz$ evaluated anticlockwise around the circle $|z - i| = 2$, where $i = \sqrt{-1}$, is

(A) -4 (B) 0 (C) 2 (D) $2 - 2i$

Q.38 A matrix has eigenvalues –1 and –2. The corresponding eigenvectors are $\begin{bmatrix} 1 \\ -1 \end{bmatrix}$ and $\begin{bmatrix} 1 \\ -2 \end{bmatrix}$ respectively. The matrix is

(A) $\begin{bmatrix} 1 & 1 \\ -1 & -2 \end{bmatrix}$ (B) $\begin{bmatrix} 1 & 2 \\ -2 & -4 \end{bmatrix}$ (C) $\begin{bmatrix} 1 & 0 \\ 0 & -2 \end{bmatrix}$ (D) $\begin{bmatrix} 0 & 1 \\ -2 & -3 \end{bmatrix}$

Q.39 A dielectric slab with 500 mm × 500 mm cross-section is 0.4 m long. The slab is subjected to a uniform electric field of $\mathbf{E} = 6\mathbf{a}_x + 8\mathbf{a}_y$ kV/mm. The relative permittivity of the dielectric material is equal to 2. The value of constant $_0$ is 8.85×10^{-12} F/m. The energy stored in the dielectric in Joules is

(A) 8.85×10^{-11} (B) 8.85×10^{-5} (C) 88.5 (D) 885

http://freshersplane.com/

Q.40 For a power system network with n nodes, Z_{33} of its bus impedance matrix is $j0.5$ per unit. The voltage at node 3 is 1.3 –10 per unit. If a capacitor having reactance of $-j3.5$ per unit is now added to the network between node 3 and the reference node, the current drawn by the capacitor per unit is

(A) 0.325 –100 (B) 0.325 80 (C) 0.371 –100 (D) 0.433 80

Q.41 The separately excited dc motor in the figure below has a rated armature current of 20 A and a rated armature voltage of 150 V. An ideal chopper switching at 5 kHz is used to control the armature voltage. If L_a= 0.1 mH, R_a= 1 Ω, neglecting armature reaction, the duty ratio of the chopper to obtain 50% of the rated torque at the rated speed and the rated field current is

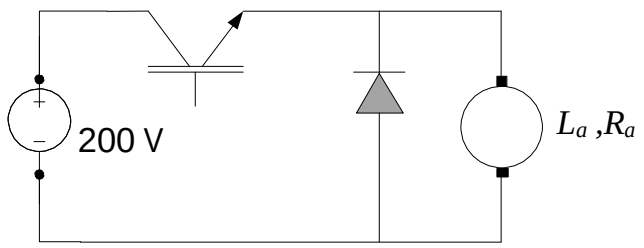

(A) 0.4 (B) 0.5 (C) 0.6 (D) 0.7

Q.42 A voltage 1000 sin t Volts is applied across YZ. Assuming ideal diodes, the voltage measured across WX in Volts is

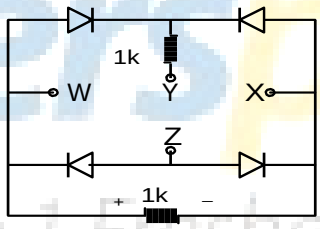

(A) sin t (B) $(\sin t \ |\sin t|)/2$

(C) $(\sin t \ |\sin t|)/2$ (D) 0 for all t

Q.43 Three capacitors C_1, C_2, and C_3, whose values are 10μF, 5μF, and 2μF respectively, have breakdown voltages of 10V, 5V, and 2V respectively. For the interconnection shown, the maximum safe voltage in Volts that can be applied across the combination and the corresponding total charge in μC stored in the effective capacitance across the terminals are respectively

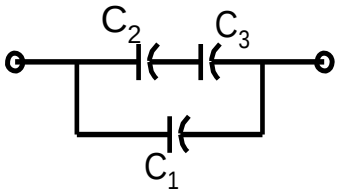

(A) 2.8 and 36 (B) 7 and 119

(C) 2.8 and 32 (D) 7 and 80

http://freshersplane.com/

Q.44 In the circuit shown below, if the source voltage $V_S = 100 \quad 53.13$ V then the Thevenin's equivalent voltage in Volts as seen by the load resistance R_L is

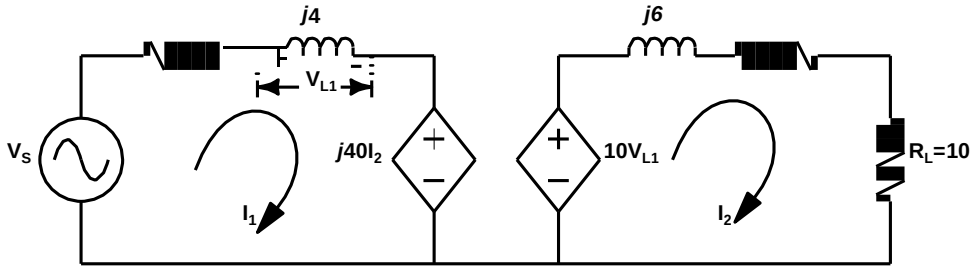

(A) 100 90 (B) 800 0 (C) 800 90 (D) 100 60

Q.45 The open-loop transfer function of a dc motor is given as $\frac{(s)}{V_a(s)} \quad \frac{10}{1 \quad 10s}$. When connected in feedback as shown below, the approximate value of K_a that will reduce the time constant of the closed loop system by one hundred times as compared to that of the open-loop system is

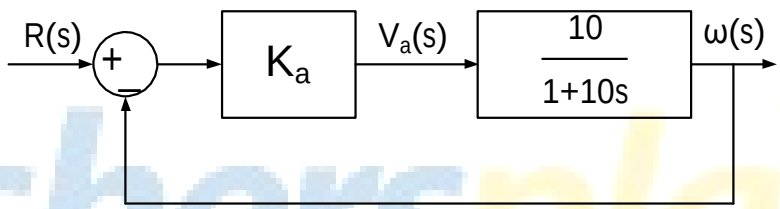

(A) 1 (B) 5 (C) 10 (D) 100

Q.46 In the circuit shown below, the knee current of the ideal Zener diode is 10 mA. To maintain 5 V across R_L, the minimum value of R_L in Ω and the minimum power rating of the Zener diode in mW respectively are

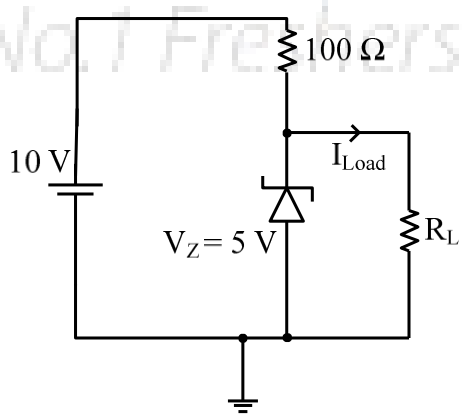

(A) 125 and 125 (B) 125 and 250 (C) 250 and 125 (D) 250 and 250

http://freshersplane.com/

Q.47 A strain gauge forms one arm of the bridge shown in the figure below and has a nominal resistance without any load as $R_s = 300\ \Omega$. Other bridge resistances are $R_1 = R_2 = R_3 = 300\ \Omega$. The maximum permissible current through the strain gauge is 20 mA. During certain measurement when the bridge is excited by maximum permissible voltage and the strain gauge resistance is increased by 1% over the nominal value, the output voltage V_0 in mV is

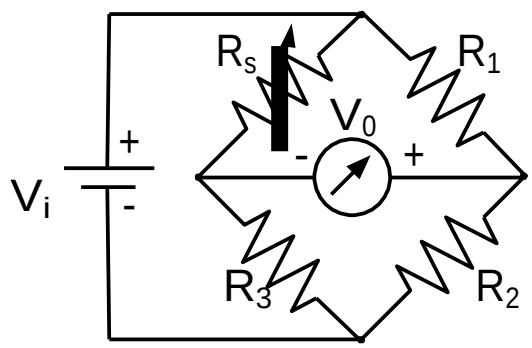

(A) 56.02 (B) 40.83 (C) 29.85 (D) 10.02

Common Data Questions

Common Data for Questions 48 and 49:

The state variable formulation of a system is given as

$$\begin{bmatrix} \dot{x}_1 \\ \dot{x}_2 \end{bmatrix} = \begin{bmatrix} 2 & 0 \\ 0 & 1 \end{bmatrix} \begin{bmatrix} x_1 \\ x_2 \end{bmatrix} + \begin{bmatrix} 1 \\ 1 \end{bmatrix} u, \quad x_1(0) = 0, \quad x_2(0) = 0 \text{ and } y = \begin{bmatrix} 1 & 0 \end{bmatrix} \begin{bmatrix} x_1 \\ x_2 \end{bmatrix}$$

Freshersplane
India's No.1 Freshers career Site

Q.48 The response $y(t)$ to a unit step input is

(A) $\frac{1}{2} - \frac{1}{2}e^{-2t}$ (B) $1 - \frac{1}{2}e^{-2t} - \frac{1}{2}e^{-t}$

(C) $e^{-2t} - e^{-t}$ (D) $1 - e^{-t}$

Q.49 The system is

(A) controllable but not observable
(B) not controllable but observable
(C) both controllable and observable
(D) both not controllable and not observable

http://freshersplane.com/

Common Data for Questions 50 and 51:

In the figure shown below, the chopper feeds a resistive load from a battery source. MOSFET Q is switched at 250 kHz, with a duty ratio of 0.4. All elements of the circuit are assumed to be ideal.

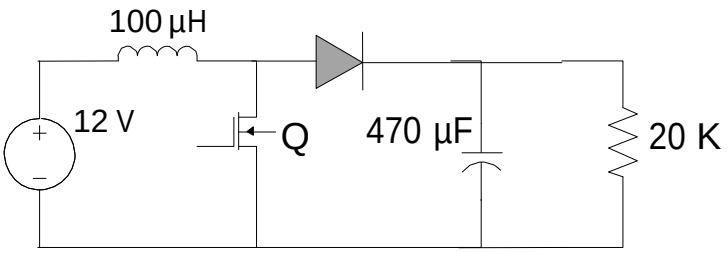

Q.50 The PEAK-TO-PEAK source current ripple in Amps is

(A) 0.96 (B) 0.144 (C) 0.192 (D) 0.288

Q.51 The average source current in Amps in steady-state is

(A) 3/2 (B) 5/3 (C) 5/2 (D) 15/4

Linked Answer Questions

Statement for Linked Answer Questions 52 and 53:

In the following network, the voltage magnitudes at all buses are equal to 1 p.u., the voltage phase angles are very small, and the line resistances are negligible. All the line reactances are equal to $j1\ \Omega$.

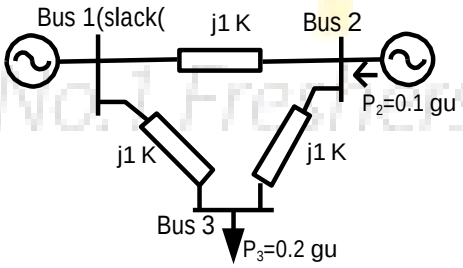

Q.52 The voltage phase angles in rad at buses 2 and 3 are

(A) $_2$ 0.1, $_3$ 0.2

(B) $_2$ 0, $_3$ 0.1

(C) $_2$ 0.1, $_3$ 0.1

(D) $_2$ 0.1, $_3$ 0.2

Q.53 If the base impedance and the line-to-line base voltage are 100 Ω and 100 kV, respectively, then the real power in MW delivered by the generator connected at the slack bus is

(A) −10 (B) 0 (C) 10 (D) 20

http://freshersplane.com/

Statement for Linked Answer Questions 54 and 55:

The Voltage Source Inverter (VSI) shown in the figure below is switched to provide a 50 Hz, square-wave ac output voltage (v_o) across an R-L load. Reference polarity of v_o and reference direction of the output current i_o are indicated in the figure. It is given that $R \quad 3 \quad , L \quad 9.55$ mH.

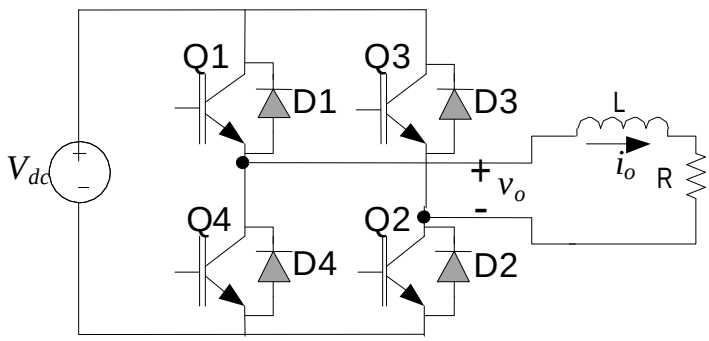

Q.54 In the interval when $v_0 \quad 0$ and $i_0 \quad 0$ the pair of devices which conducts the load current is

(A) Q1, Q2 (B) Q3, Q4 (C) D1, D2 (D) D3, D4

Q.55 Appropriate transition i.e., Zero Voltage Switching (ZVS)/Zero Current Switching (ZCS) of the IGBTs during turn-on/turn-off is

(A) ZVS during turn-off (B) ZVS during turn-on
(C) ZCS during turn-off (D) ZCS during turn-on

Freshersplane
India's No.1 Freshers career Site

http://freshersplane.com/

General Aptitude (GA) Questions

Q.56 to Q.60 carry one mark each.

Q.56 Choose the grammatically **CORRECT** sentence:

(A) Two and two add four.
(B) Two and two become four.
(C) Two and two are four.
(D) Two and two make four.

Q.57 **Statement:** You can always give me a ring whenever you need.

Which one of the following is the best inference from the above statement?

(A) Because I have a nice caller tune.
(B) Because I have a better telephone facility.
(C) Because a friend in need is a friend indeed.
(D) Because you need not pay towards the telephone bills when you give me a ring.

Q.58 In the summer of 2012, in New Delhi, the mean temperature of Monday to Wednesday was 41°C and of Tuesday to Thursday was 43°C. If the temperature on Thursday was 15% higher than that of Monday, then the temperature in °C on Thursday was

(A) 40 (B) 43 (C) 46 (D) 49

Q.59 Complete the sentence:

Dare _____mistakes.

(A) commit (B) to commit (C) committed (D) committing

Q.60 They were requested not to **quarrel** with others.

Which one of the following options is the closest in meaning to the word **quarrel**?

(A) make out (B) call out (C) dig out (D) fall out

Q.61 to Q.65 carry two marks each.

Q.61 A car travels 8 km in the first quarter of an hour, 6 km in the second quarter and 16 km in the third quarter. The average speed of the car in km per hour over the entire journey is

(A) 30 (B) 36 (C) 40 (D) 24

Q.62 Find the sum to n terms of the series 10+84+ 734 + ...

(A) $\frac{9\ 9^{n}\quad 1}{10}\quad 1$

(B) $\frac{9\ 9^{n}\quad 1}{8}\quad 1$

(C) $\frac{9\ 9^{n}\quad 1}{8}\quad n$

(D) $\frac{9\ 9^{n}\quad 1}{8}\quad n^{2}$

http://freshersplane.com/

Q.63 **Statement:** There were different streams of freedom movements in colonial India carried out by the moderates, liberals, radicals, socialists, and so on.

Which one of the following is the best inference from the above statement?

(A) The emergence of nationalism in colonial India led to our Independence.
(B) Nationalism in India emerged in the context of colonialism.
(C) Nationalism in India is homogeneous.
(D) Nationalism in India is heterogeneous.

Q.64 The set of values of p for which the roots of the equation $3x^2+2x+p(p-1) = 0$ are of opposite sign is

(A) $(-\infty, 0)$ (B) $(0, 1)$ (C) $(1, \infty)$ (D) $(0, \infty)$

Q.65 What is the chance that a leap year, selected at random, will contain 53 Saturdays?

(A) 2/7 (B) 3/7 (C) 1/7 (D) 5/7

END OF THE QUESTION PAPER

Freshersplane
India's No.1 Freshers career Site

http://freshersplane.com/

Space for Rough Work

Freshersplane
India's No.1 Freshers career Site

http://freshersplane.com/

Space for Rough Work

Freshersplane
India's No.1 Freshers career Site

http://freshersplane.com/

Space for Rough Work

Freshersplane
India's No.1 Freshers career Site

http://freshersplane.com/

Space for Rough Work

Freshersplane
India's No.1 Freshers career Site

http://freshersplane.com/